| MALE END VIEW (P1) | FEMALE END VIEW (J1) | FEMALE END VIEW (J2) |
|---|---|---|
| 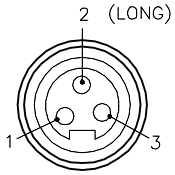  | 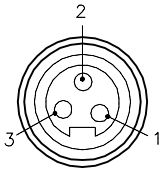  | 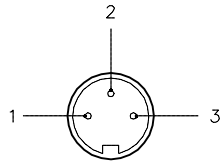  |
| power fast. | power fast. | M16 connector |

## SPECIFICATIONS

| | |
|---|---|
| CONTACT CARRIER MATERIAL | PVC (P1,J1), TPU (J2) |
| MOLDED HEAD MATERIAL/COLOR | PVC/BLACK (P1,J2), TPU/BLACK (J2) |
| CONTACT MATERIAL/PLATING | BRASS or COPPER/GOLD |
| COUPLING NUT MATERIAL/PLATING | BRASS/NICKEL |
| RATED CURRENT [A] | 30 A COMBINED, 15 A DROP |
| RATED VOLTAGE [V] | 600 V |
| CABLE JACKET MATERIAL/COLOR | TPE/BLACK |
| CONDUCTOR INSULATION MATERIAL | PVC |
| NUMBERS OF CONDUCTORS [AWG] | 3x14 AWG |
| TEMPERATURE RANGE | −40°C to +90°C (−40°F to +194°F) |
| PROTECTION CLASS | MEETS NEMA 1,3,4,6P AND IEC IP67, IP68, IP69K |

## WIRING DIAGRAM

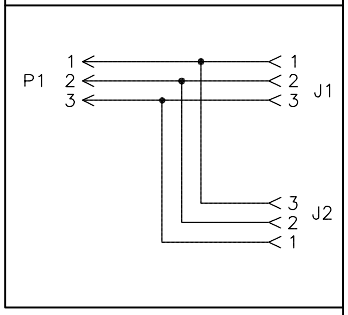


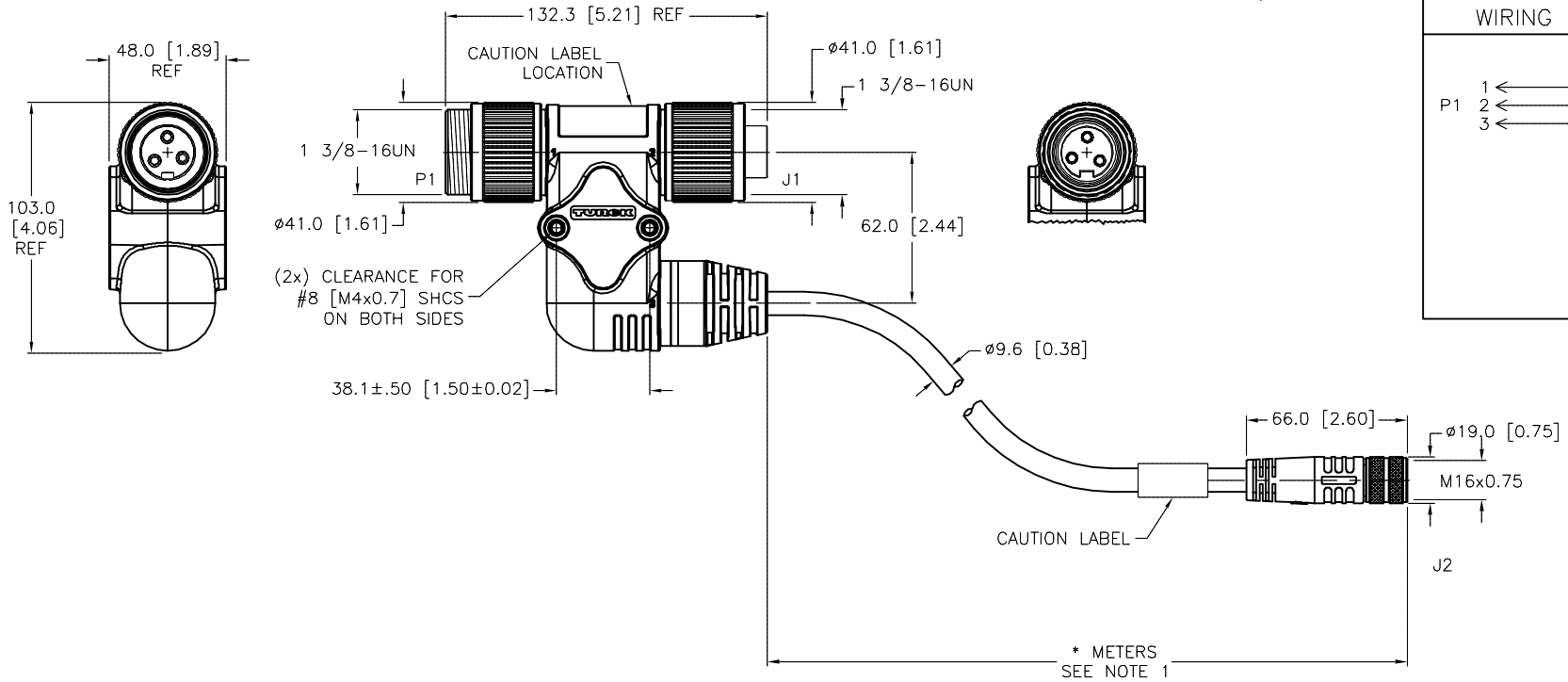


| CABLE LENGTH | TOLERANCE * |
|---|---|
| ALL LENGTHS | + 4% (OR 50mm) OF LENGTH<br>− 0% (OR 0mm) OF LENGTH<br>WHICHEVER IS GREATER |
| **STRIP LENGTH** | **TOLERANCE *** |
| 0-7mm | ±0.5mm |
| 8-29mm | ±1.0mm |
| 30-49mm | ±2.0mm |
| 50-69mm | ±3.0mm |
| 70-100mm | ±4.0mm |
| OVER 100mm | ±5.0mm |
| * UNLESS OTHERWISE SPECIFIED | |

**CAUTION:**
RISK OF ELECTRICAL SHOCK
DO NOT DISCONNECT UNDER LOAD

**SOURCE DRAWING - FOR REFERENCE ONLY**

NOTES:

1. "*" INDICATES CABLE LENGTH IN METERS. CONTACT TURCK TO ORDER SPECIFIC LENGTHS.

2. "/S4000" DESIGNATES TC-ER CABLE.

| REV | DESCRIPTION | BY | DATE | ECO NO. |
|---|---|---|---|---|
| B | DRAWING PROCESSED AS PART OF ECO 39976 | KMY | 12/03/12 | 39976 |

RELATED DOCUMENTS
1.
2.
3.
4.

3RD ANGLE PROJECTION

THIS DRAWING IS CONFIDENTIAL AND THE PROPERTY OF TURCK INC. USE OF THIS DOCUMENT WITHOUT WRITTEN PERMISSION IS PROHIBITED.

TURCK INC
High Technology Sensors and Automation Controls
3000 CAMPUS DRIVE
MINNEAPOLIS, MN 55441
1-800-544-7769
(763) 553-7300
(763) 553-0708 fax
turck.com

MATERIAL: SEE SPECIFICATIONS

FINISH: SEE SPECIFICATIONS

ALL DIMENSIONS DISPLAYED ON THIS DRAWING ARE FOR REFERENCE ONLY

CONTACT TURCK FOR MORE INFORMATION

DRFT: TR | DATE: 05/11/11
APVD: PJ | SCALE: 1=3.0

UNIT OF MEASUREMENT
**MILLIMETER [ INCH ]**
DO NOT SCALE THIS DRAWING

DESCRIPTION: SH-GSDM/GKDM/BKM 34-*/S4000

IDENTIFICATION NO.

REV: B

FILE: 777024412 | SHEET 1 OF 1

Approved 12/14/2012, work order #36040 by J.B.